THIS DRAWING IS UNPUBLISHED. RELEASED FOR PUBLICATION - , - .
© COPYRIGHT - By - ALL RIGHTS RESERVED.

LOC	DIST
CM	0

REVISIONS

P	LTR	DESCRIPTION	DATE	DWN	APVD
	D2	REVISED PER ECO-11-004917	11MAR11	RK	HMR

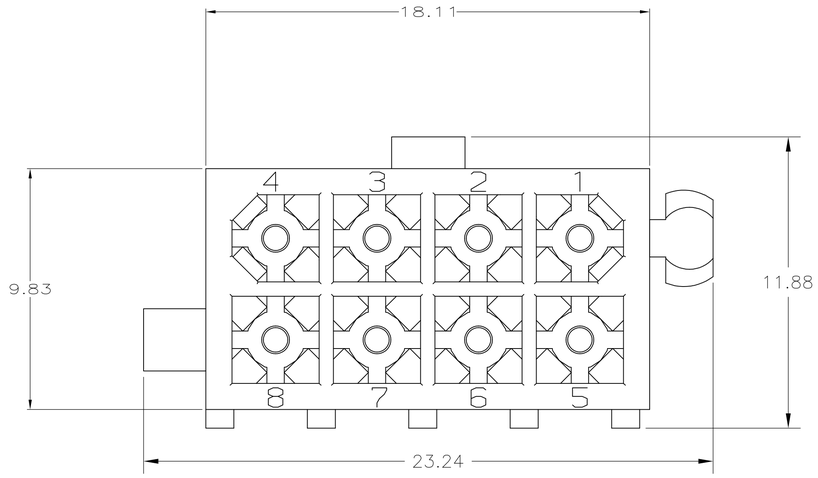

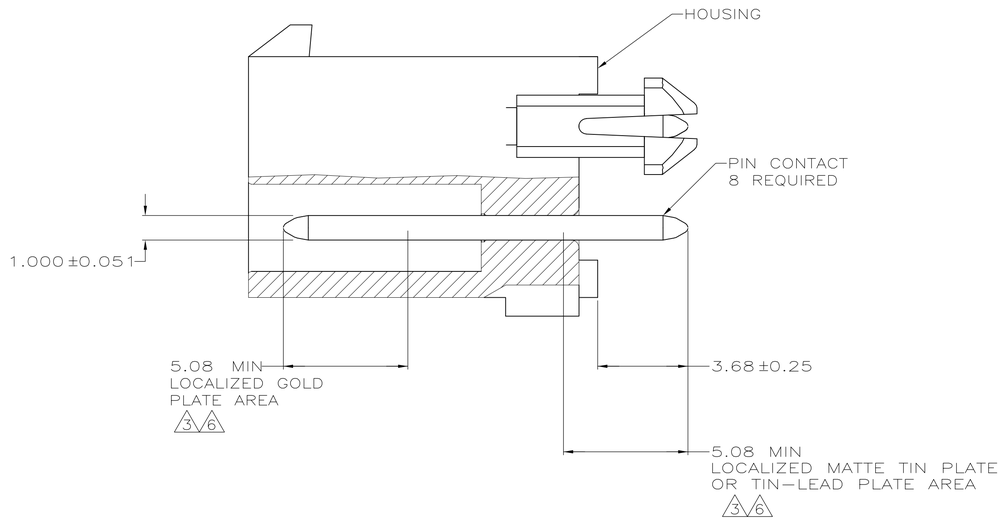

1. PINS TO COMPLY WITH AMP SOLDERABILITY SPEC. 109-11-3.

2. 0.00381 MIN MATTE TIN LEAD PLATE OVER 0.00127 MIN NICKEL.

3. 0.00076 MIN GOLD PLATE IN THE LOCALIZED PLATE AREA, 0.00381 MATTE TIN LEAD IN THE LOCALIZED PLATE AREA, BOTH OVER 0.00127 MIN NICKEL.

4. 0.00381 MIN MATTE TIN PLATE OVER 0.00127 MIN NICKEL.

5. 0.00076 MIN GOLD PLATE IN THE LOCALIZED PLATE AREA, 0.00381 MATTE TIN IN THE LOCALIZED PLATE AREA, BOTH OVER 0.00127 MIN NICKEL.

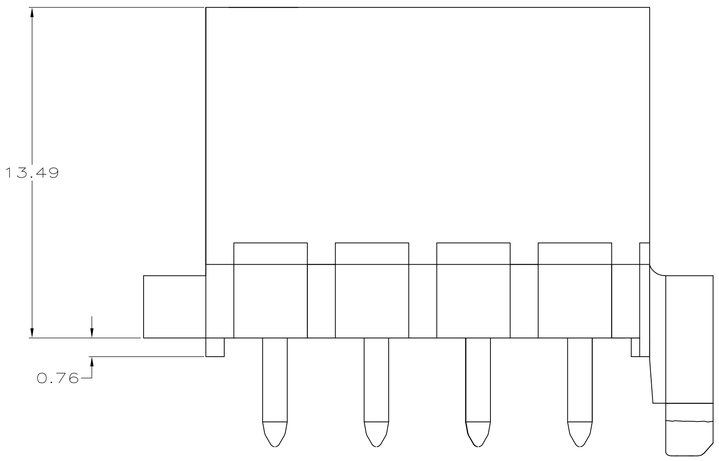

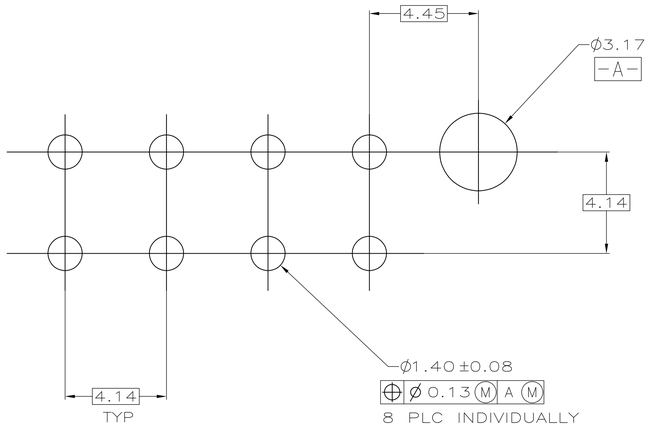

RECOMMENDED MOUNTING HOLE PATTERN
FOR 1.57 THICK P.C. BOARD

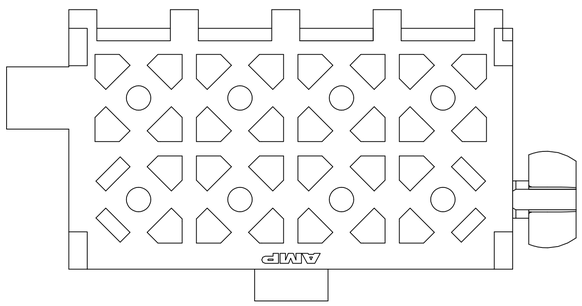

MATERIAL (PIN)	FINISH	MATERIAL (HOUSING)	COLOR	PART NO.
BRASS, TIN	4	HIGH TEMP NYLON, UL94V-2	BLACK	6-794065-0
BRASS, TIN	4	HIGH TEMP NYLON, UL94V-0	BLACK	5-794065-0
BRASS, GOLD	5	NYLON, UL94V-0	WHITE	1-794065-1
BRASS, TIN	4	NYLON, UL94V-0	WHITE	1-794065-0
BRASS, GOLD	3	NYLON, UL94V-0	WHITE	794065-2
BRASS, TIN-LEAD	2	NYLON, UL94V-0	WHITE	794065-1

THIS DRAWING IS A CONTROLLED DOCUMENT.

DIMENSIONS: mm

TOLERANCES UNLESS OTHERWISE SPECIFIED:
0 PLC ± -
1 PLC ± -
2 PLC ± 0.13
3 PLC ± -
4 PLC ± -
ANGLES ± -

MATERIAL -
FINISH -

DWN S CARPENTER 09JUN05
CHK R JONES 28JUL2003
APVD R JONES 28JUL2003
PRODUCT SPEC —
APPLICATION SPEC —
WEIGHT —

TE Connectivity

NAME
HEADER ASSEMBLY, 8 CKT,
DOUBLE ROW VERTICAL,
MINI UNIVERSAL MATE-N-LOK(TM)

SIZE	CAGE CODE	DRAWING NO	RESTRICTED TO
A1	00779	C-794065	—

CUSTOMER DRAWING
SCALE 8:1 SHEET 1 OF 1 REV D2

4805 (3/11)