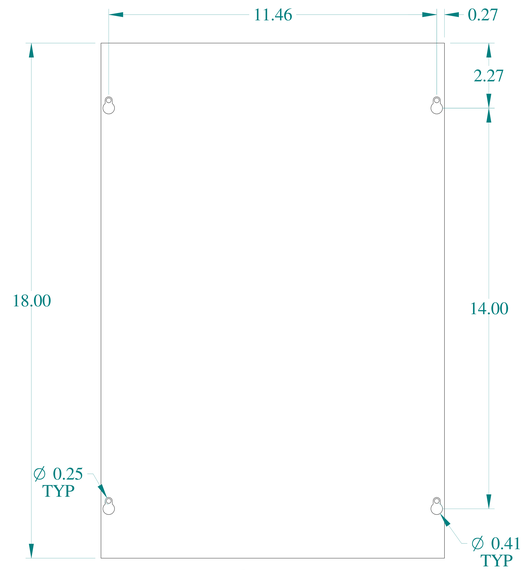

TOP VIEW

SIDE VIEW

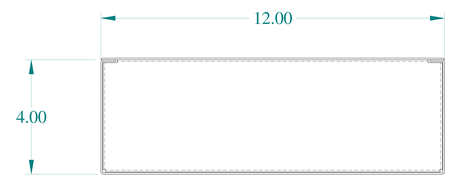

FRONT VIEW

SIDE VIEW

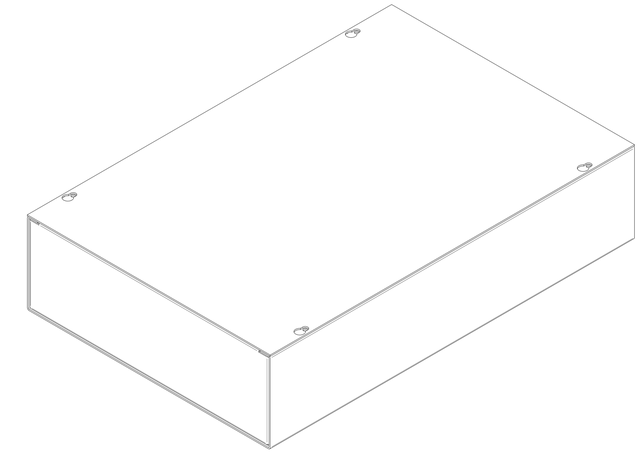

ISOMETRIC VIEWS

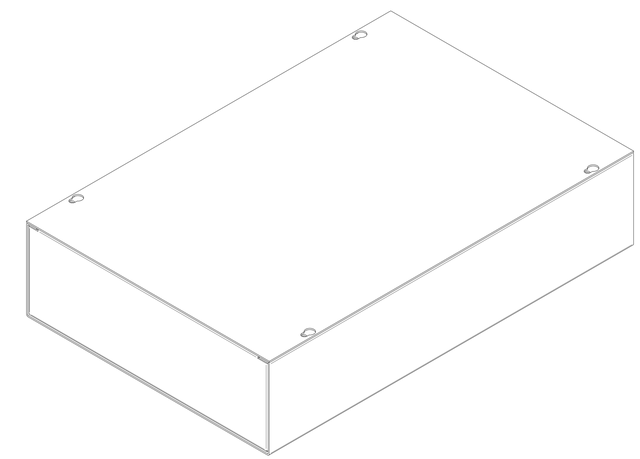

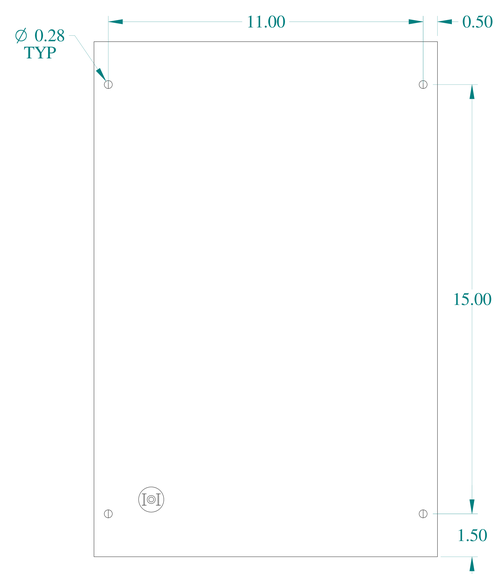

BOTTOM VIEW

HAMMOND MANUFACTURING®

www.hammondmfg.com

Data subject to change without notice.

Part # : CS18124	Date : Mar. 23, 2019

Link:www.hammfg.com/CS18124